INDEX TO 1990 ARTICLES

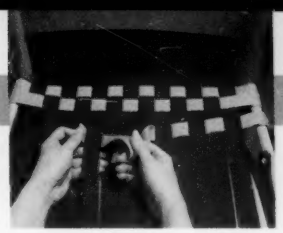

Shaker-style slat-back chair, June, p. 22.

1957 Chevrolet model, Aug., p. 16.

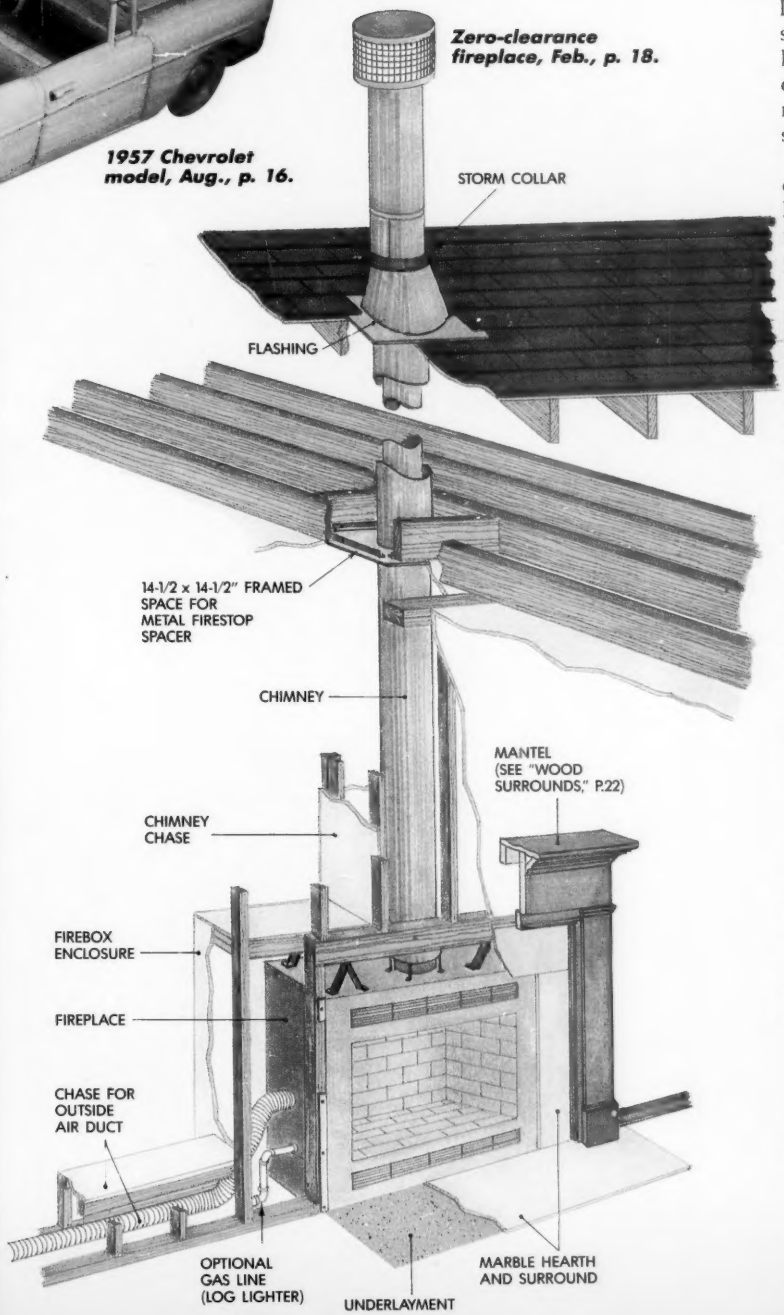

Zero-clearance fireplace, Feb., p. 18.

Our annual index lists all departments and feature articles published in *Workbench* from January-February through November-December 1990. The *Workbench* Master Index, which lists all articles published since October 1959, is available for $5. Please send a self-addressed 9- x 12-in. envelope along with your master index request to *Workbench* Index, 4251 Pennsylvania Avenue, Kansas City, MO 64111.

Back issues, if available, can be purchased for $3.50 from the address above. If you do not know the specific issue you need, give us clear indication of the project or subject you want.

HOME REMODELING/REPAIR

Subject	Issue	Page
—A—		
Asbestos in the Home	Apr	9
—C—		
Carpenter's Apprentice:		
Install Door Casing	Dec	20
Screw Hole Repair	Feb	9
Wall Grabber Wall Anchor	Oct	19
Cement-Asbestos Siding	Apr	52
—D—		
Deck, Ground-Level	Jun	28
Deck Maintenance	Jun	30
Door, Install Hinged Terrace	Aug	45
—F—		
Fence and Gate, Backyard	Jun	41
Fireplace, Zero-Clearance	Feb	18
Fireplace Mantel, Kit Plans	Feb	25
Fireplace Mantel, Mahogany	Feb	22
—O—		
Old House Restoration		
Install Security Door	Aug	34
Install Siding	Apr	50
Addendum	Jun	4
—P—		
Playhouse, Stockade Fence	Jun	47
Privacy Screen, Porch	Jun	38
Privacy Screen, Window	Jun	42
—R—		
Retaining Wall Maintenance, Wood	Aug	8
—S—		
Security Systems Roundup	Aug	38
Shop Tips:		
Car Chocks	Dec	19
Cleaning Gutters	Dec	18
Locate Room Center	Apr	66
Sanding Coves	Dec	69
Shelf Support	Aug	6
Sink, Workshop	Oct	69
Stained Glass, Decorating with	Apr	46
Stained Glass, Victorian Hanging Panel	Apr	42
—T—		
Table, Outdoor Concrete	Oct	34
Tile, Custom Decorating	Apr	32
Tile, Installation	Apr	28
Tile, Pedestal Tables	Apr	30

WORKBENCH MAGAZINE

Subject	Issue	Page
—W—		
***Workbench* Basics:**		
Keep Drains Flowing	Oct	20
***Workbench* Solver:**		
Forming Concrete Steps	Oct	10
Leaking Deck	Jun	12
Painting Preparation	Apr	6
Peeling Paint	Feb	14
Replace a Water Service Line	Aug	7
Sealing Siding	Jun	11
Spray Guns	Dec	14
Spraying Paint	Oct	10
Wood Floors over Concrete	Feb	14
Wall, Stone	Aug	48
Waste Disposal, Hazardous	Oct	71
Wet Bar Cabinets	Dec	48
Wet Bar Plumbing	Dec	56
Wiring a Shop	Oct	62
Addendum	Dec	10

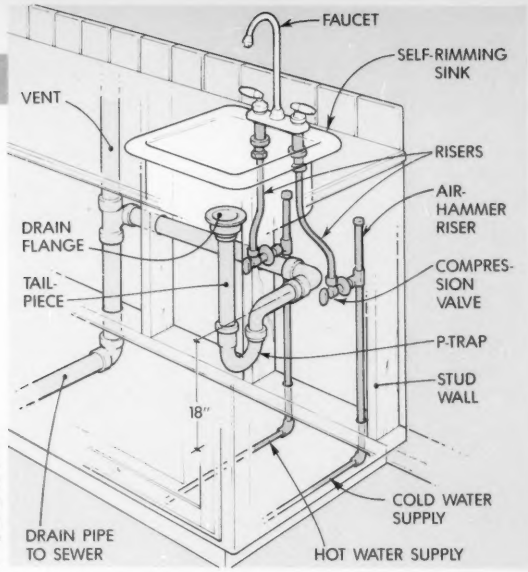

Wet bar plumbing, Dec., p. 56, accompanied an article on building cabinets and a wine rack for a wet bar.

WOODWORKING/SHOP

Subject	Issue	Page
—A—		
Antique Restorations:		
Bentwood Chairs	Apr	12
Split Table Top	Jun	14
—B—		
Bellows, Fireplace	Dec	22
Box, Jewelry	Dec	40
Boxes, Shaker Wall Storage	Dec	62
Birdhouse, Teahouse	Jun	36
Birdhouse, Three-Cornered	Jun	34
Addendum	Aug	4
Build-A-Box Contest Winners	Oct	30
—C—		
Cabinet, Stereo	Feb	38
Cabinets, Mix and Match Modular	Aug	26
Cabinets, Shop Storage	Oct	42
Benchtop Tool Stand	Oct	44
Chop Saw Stand	Oct	44
Router Table	Oct	46
Tool Chest	Oct	47
Wall Cabinet	Oct	44

The rolling tool chest is one of five easy-to-build shop storage cabinets featured in Oct., p. 47.

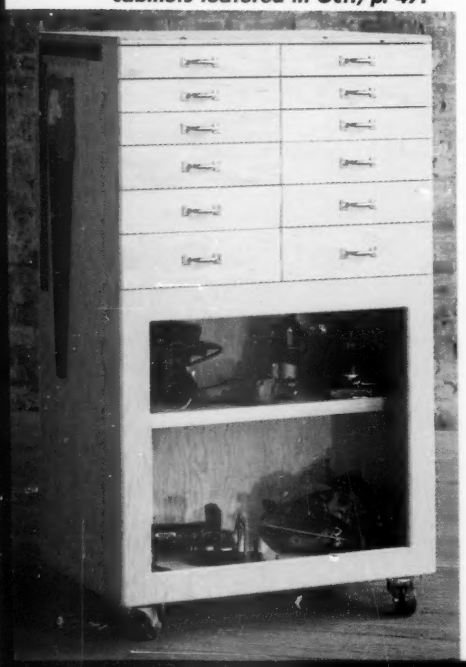

Subject	Issue	Page
Cart, Serving	Aug	22
Chair, Outdoor Lifeguard	Jun	50
Chair, Outdoor Wing	Jun	54
Country Workshop Projects	Feb	30
Shaker Candle Box	Feb	32
Sugar Scoop	Feb	31
Wall Sconce	Feb	32
Crosscuts (Vintage Tools):		
Bar Clamp	Jun	88
Brace	Aug	64
Drawknife	Oct	96
Levels	Apr	80
Socket Wrench	Dec	104
Stair Saw	Feb	64
—D—		
Dining Set, Shaker-Style, Pt. I, Drop-Leaf Table	Apr	55
Dining Set, Shaker-Style, Pt. II, Slat-Back Chairs	Jun	22
—E—		
Earrings, Wooden	Dec	34
—F—		
Finishes, Clear Water-Based	Oct	64
Furniture, Outdoor	Jun	48
—G—		
Game, Tic-Tac-Toe	Dec	28
Glass, Cutting	Apr	38
—H—		
Halloween Plywood Cutouts	Oct	14
—L—		
Ladder, Rolling Library	Apr	34
—M—		
Model, 1957 Chevrolet Convertible	Aug	16
—P—		
Picture Frame	Dec	32
—R—		
Rack, Glove	Feb	48
Ring Post	Dec	37
—S—		
Saw, Shop-Built Panel	Oct	48
Shop Jigs:		
Band Saw Circle-Cutting	Oct	59
Circular Saw Cutoff	Oct	59
Scroll Saw Hold-Down	Oct	60
Shop Tips:		
Bamboo Skewer Uses	Dec	19
Bamboo Stripping Tool	Apr	10
Centering Lathe Stock	Feb	11
Clamphorse	Dec	69
Clamping Square Corners	Feb	11
Disposable Paint Brushes	Dec	18
Drum Sander Lazy-Susan	Oct	56
Dust Vacuum Sealant	Oct	72
Economy Cleaning Pads	Oct	56
Folding Toolbox	Aug	6
Glue Applicator	Dec	69
Grinding Gauge	Oct	56
Jeans for Buffing	Dec	19
Lathe Screw Center	Oct	56
Magnetized Pushsticks	Dec	69
Miniature Shingles	Aug	6
Painting Supports	Jun	20
Plain Scraper	Apr	10
Pressing Dowels	Jun	20
Salvage Paint Thinner	Oct	72
Sanding Extension	Feb	11
Sanding with Saw Dust	Apr	66
Sharpen Wire Brush	Jun	20
Sheetmetal-Screw Driver	Dec	18
Small Push Stick	Feb	11
Stain Sprayer	Oct	56
Staple Pinch Dogs	Dec	19
Veneer Tape Glue	Oct	56
Speakers, High-Fidelity	Jun	64
—T—		
Table, Federal Console	Dec	70
Table, Outdoor Coffee	Jun	56
Table, Outdoor Dining	Jun	52
Table, Outdoor Star	Jun	60
Table, Outdoor Step	Jun	59
Tool Base, Roll-Around	Oct	58
Tool Box, Installer's	Dec	58
Tool Roundup:		
Bench Grinders	Oct	52
Cordless Screwdrivers	Apr	62
Mini Angle Grinders	Dec	74
Thickness Planers	Feb	34
Tool Tales:		
Calipers	Dec	16
Pinch Dogs	Jun	16
Starret Combination Square	Apr	18
Toy, Bill Ding Blocks	Dec	30
Toy, Periscope	Dec	38
Tray, Pin Cushion	Aug	31
Tricycle, Toddler's	Aug	42
Addendum	Oct	6
Addendum	Dec	6
—U—		
Use-Tests:		
Delta Plate Joiner	Feb	15
Honeywell Power Lockout	Dec	80
Shopsmith Strip Sander	Jun	62
—W—		
***Workbench* Basics:**		
Belt Sander	Feb	42
Portable Circular Saws	Jun	68
Rip and Crosscut Saws	Dec	61
Workshop Layout	Oct	38